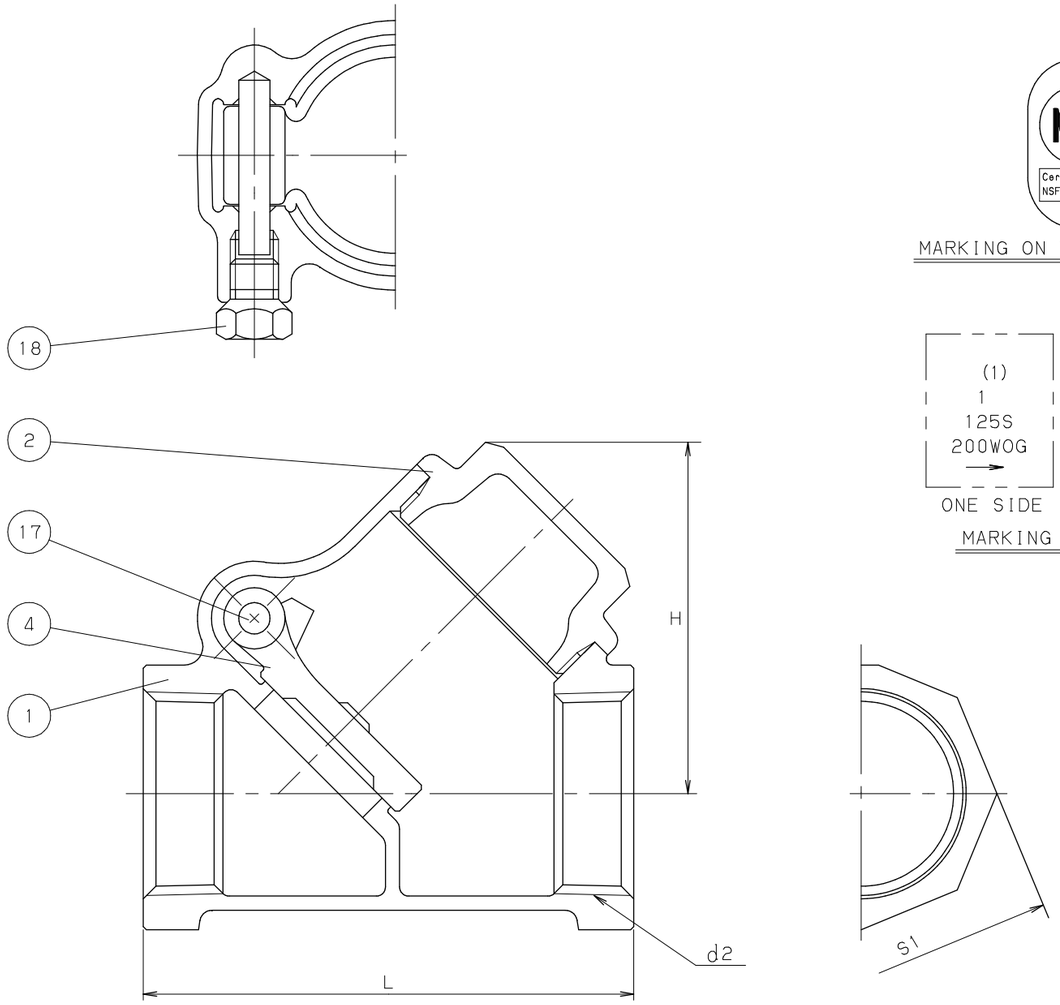

MARKING ON THE NAME PLATE

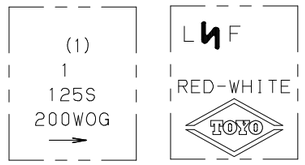

ONE SIDE THE OTHER SIDE

MARKING ON THE BODY

DIMENSIONS. UNIT:mm

NOMINAL SIZE	d2	H	L	S1		
1/2	NPT 1/2	40	56	28		
3/4	NPT 3/4	49	70	34		
1	NPT 1	58	80	41		
1.1/4	NPT 1.1/4	71	95	50		
1.1/2	NPT 1.1/2	80	110	57		
2	NPT 2	95	128	70		

NOTE (1) VALVE SIZE IDENTIFICATION.
(2) CAC911 IS LEAD FREE BRONZE.
(3) KSB-4XA AND KSB-4XC ARE LEAD FREE BRASS.

NO	NAME OF PARTS	QTY	MATERIALS	SPECIFICATIONS
1	BODY	1	CAST BRONZE	CDA No. C89530
			(CAC911 (2))	
2	CAP	1	FORGED BRASS	CDA No. C46750
			(KSB-4XA (3))	
4	DISC	1	CAST BRONZE	CDA No. C89530
			(CAC911 (2))	
17	HINGE PIN	1	COPPER	
18	PLUG	1	BRASS ROD	CDA No. C46750
			(KSB-4XC (3))	

STANDARD	FACE TO FACE OR END TO END	TOYO STANDARD
	END CONNECTION	ASME B1.20.1
	WALL THICKNESS	TOYO STANDARD
	PRESSURE TEST	TOYO STANDARD
FIGURE		(RW02) AKYRN / No.236ALF

CLASS 125 LEAD FREE CAST BRONZE SWING CHECK VALVES

SCREW CAP, Y PATTERN, AND SCREW ENDS.

DATE APPD	JUN.18.'14	DRAWING NO	△		
APPD BY	T. KOYANAGI	813-000522	△		
CHKD BY	K. NAKAI		△		
DSGND BY	N. KAMA		△		
DRAWD BY	Y. WATANABE	REV-00	MARK	DATE	BY

TOYO VALVE CO., LTD.

TOYO